Alle Rechte vorbehalten/ *All rights reserved*

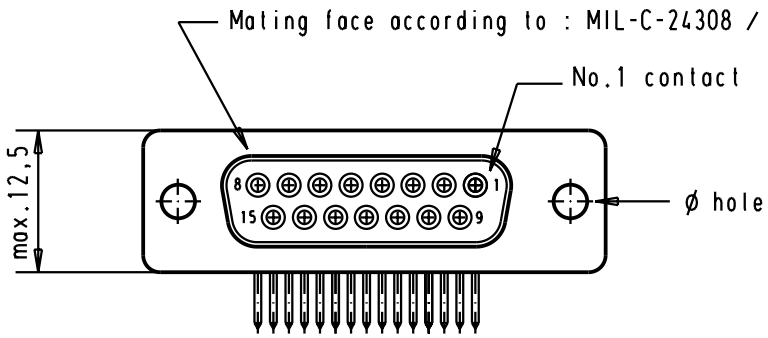

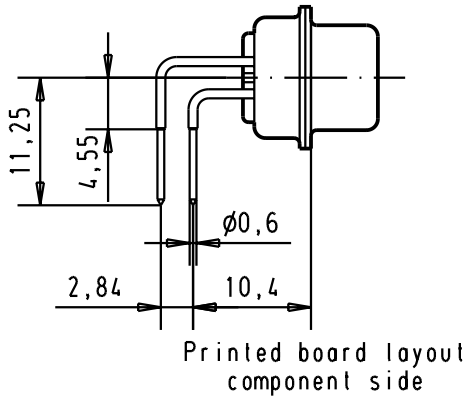

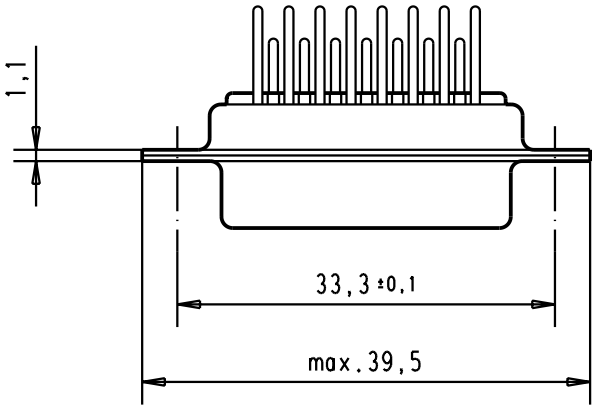

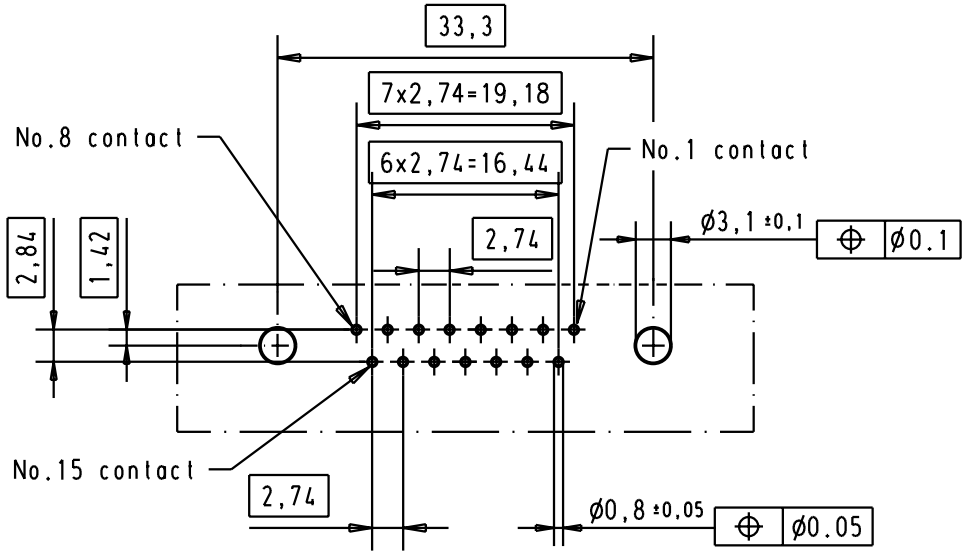

09 67 015 4764	3.1 ± 0.1	2			
09 67 015 4763	3.1 ± 0.1	3			
			29767	09-APR-02	CV
Part number	ø hole	Performance level	Mod.	Dat.	Name

	Dat.	Name
Detail.	09-APR-02	CV
Insp.		
Stand.		

All Dim. in mm
Orig. Size DIN A 4

D-Sub, Female, Angled, 15 Poles with turned contacts, solder pins and without fixing brackets

Maßstab/ *Scale* 1.5:1

HARTING EURL
F-95972 Paris

TB 0967015476x

Sub.

Blatt/ *Page* 1